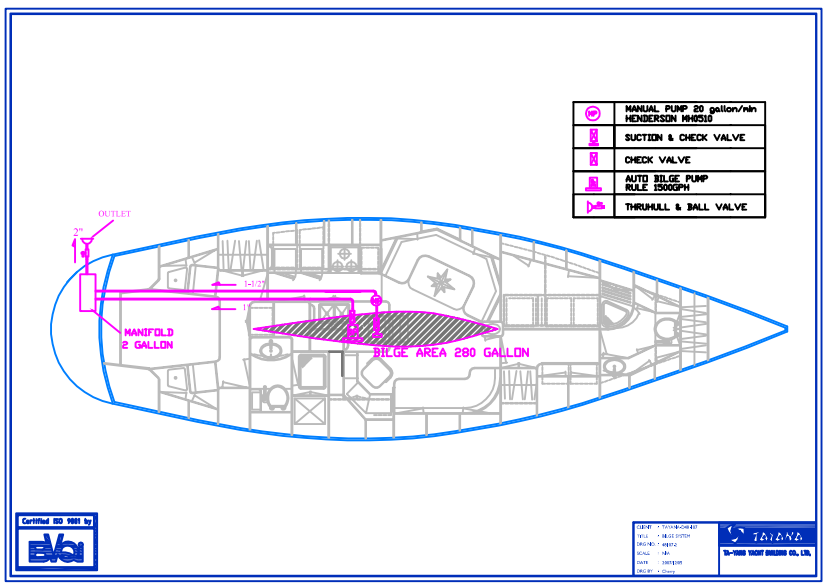
MANUAL PUMP 20 gallon/min HENDERSON MH0510
SUCTION & CHECK VALVE
CHECK VALVE
AUTO BILGE PUMP RULE 1500GPH
THRUHULL & BALL VALVE
OUTLET
MANIFOLD 2 GALLON
BILGE AREA 280 GALLON
Certified ISO 9001 by
TATANA

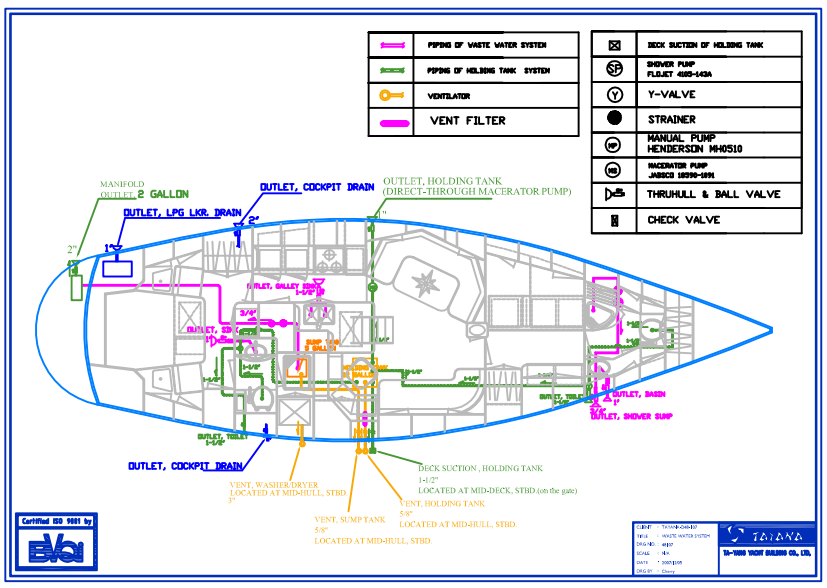
PIPING OF WASTE WATER SYSTEM
PIPING OF HOLDING TANK SYSTEM
VENTILATOR
VENT FILTER
DECK SUCTION OF HOLDING TANK
SHOWER PUMP FLOJET 4105-143A
Y-VALVE
STRAINER
MANUAL PUMP HENDERSON MH0510
MACERATOR PUMP JABSCO 18590-1894
THRUHULL & BALL VALVE
CHECK VALVE
MANIFOLD OUTLET, 2 GALLON
OUTLET, COCKPIT DRAIN
OUTLET, LPG LKR. DRAIN
OUTLET, HOLDING TANK (DIRECT-THROUGH MACERATOR PUMP)
OUTLET, BASIN
OUTLET, SHOWER SUMP
OUTLET, TOILET
OUTLET, COCKPIT DRAIN
VENT, WASHER/DRYER LOCATED AT MID-HULL, STBD
VENT, SUMP TANK 5/8" LOCATED AT MID-HULL, STBD.
VENT, HOLDING TANK 5/8" LOCATED AT MID-HULL, STBD.
DECK SUCTION, HOLDING TANK 1-1/2" LOCATED AT MID-DECK, STBD.(on the gate)
Certified ISO 9001 by
TATANA

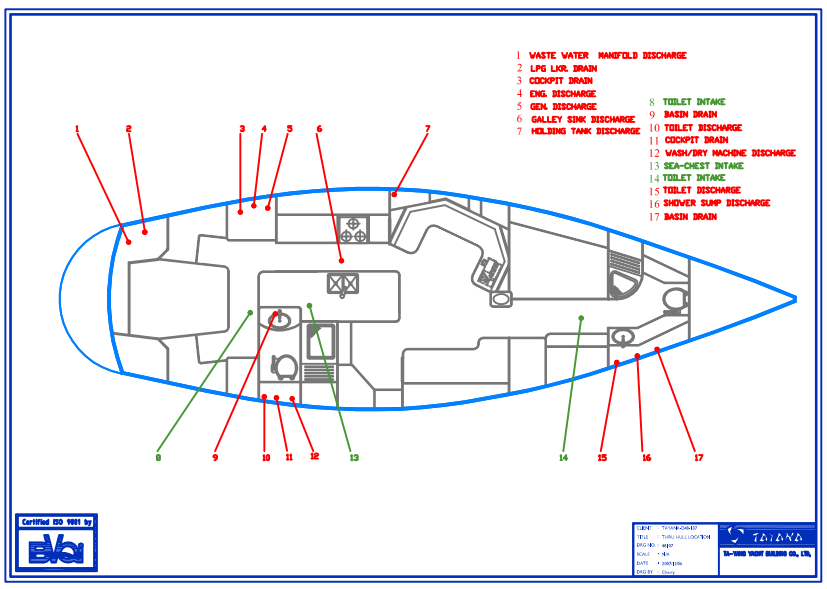
1 WASTE WATER MANIFOLD DISCHARGE
2 LPG LKR. DRAIN
3 COCKPIT DRAIN
4 ENG. DISCHARGE
5 GEN. DISCHARGE
6 GALLEY SINK DISCHARGE
7 HOLDING TANK DISCHARGE
8 TOILET INTAKE
9 BASIN DRAIN
10 TOILET DISCHARGE
11 COCKPIT DRAIN
12 WASH/DRY MACHINE DISCHARGE
13 SEA-CHEST INTAKE
14 TOILET INTAKE
15 TOILET DISCHARGE
16 SHOWER SUMP DISCHARGE
17 BASIN DRAIN
Certified ISO 9001 by
TATANA

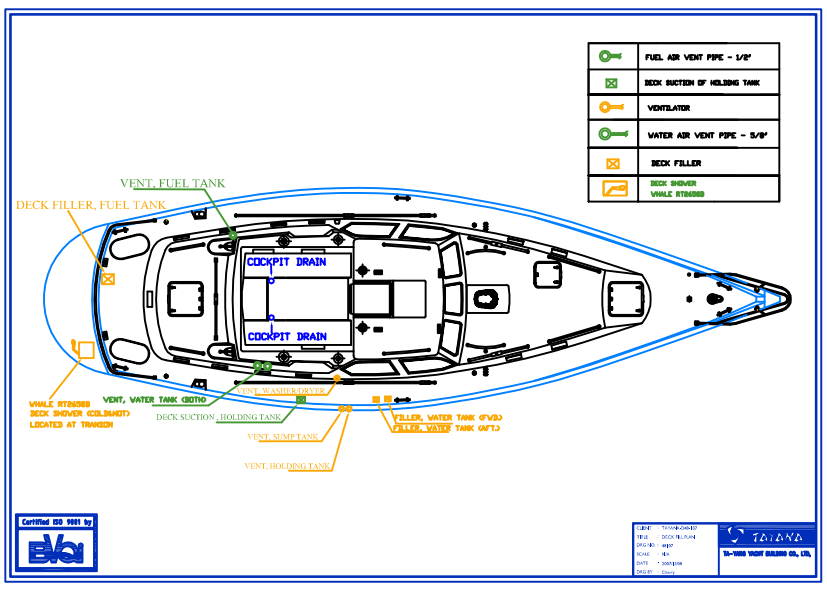
FUEL AIR VENT PIPE - 1/2"
DECK SUCTION OF HOLDING TANK
VENTILATOR
WATER AIR VENT PIPE - 3/8"
DECK FILLER
DECK SHOWER WHALE RT6588B
VENT, FUEL TANK
DECK FILLER, FUEL TANK
COCKPIT DRAIN
COCKPIT DRAIN
WHALE RT6588B DECK SHOWER (COLDWATT) LOCATED AT TRANSOM
VENT, WATER TANK (BOTH)
VENT, WASHER/DRYER
DECK SUCTION, HOLDING TANK
VENT, SUMP TANK
VENT, HOLDING TANK
FILLER, WATER TANK (FWD)
FILLER, WATER TANK (AFT)
Certified ISO 9001 by
TATANA

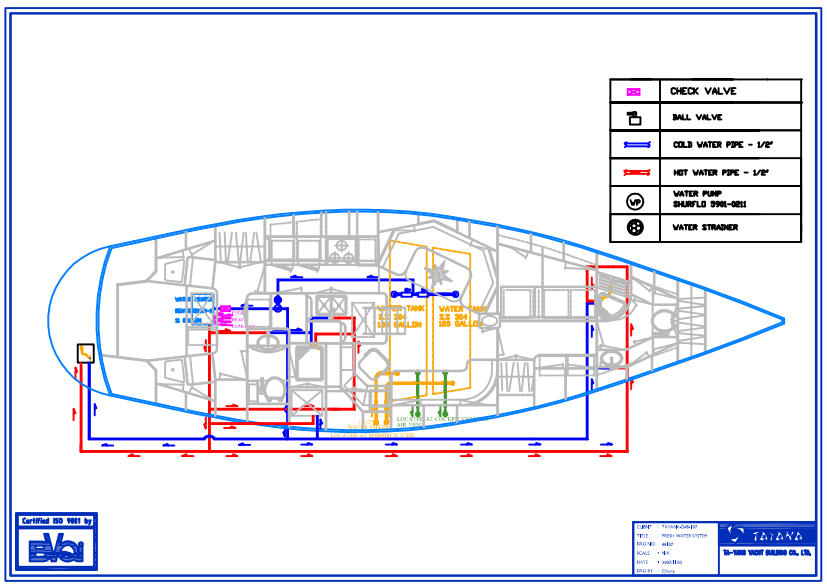
CHECK VALVE
BALL VALVE
COLD WATER PIPE - 1/2"
HOT WATER PIPE - 1/2"
WATER PUMP SHURFLO 5901-0211
WATER STRAINER
WATER TANK 22 GAL 100 GALLON
WATER TANK 22 GAL 100 GALLON
Certified ISO 9001 by
TATANA

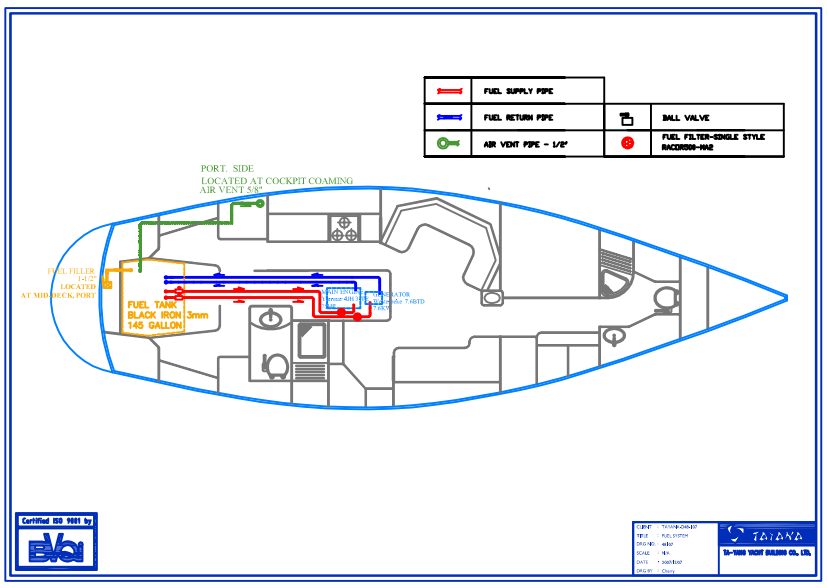
FUEL SUPPLY PIPE
FUEL RETURN PIPE
AIR VENT PIPE - 1/2"
BALL VALVE
FUEL FILTER-SINGLE STYLE RACORS900-1942
PORT. SIDE LOCATED AT COCKPIT COAMING AIR VENT 5/8"
FUEL FILLER 1-1/2" LOCATED AT MID-DECK, PORT
FUEL TANK BLACK IRON 3mm 145 GALLON
Certified ISO 9001 by
TATANA

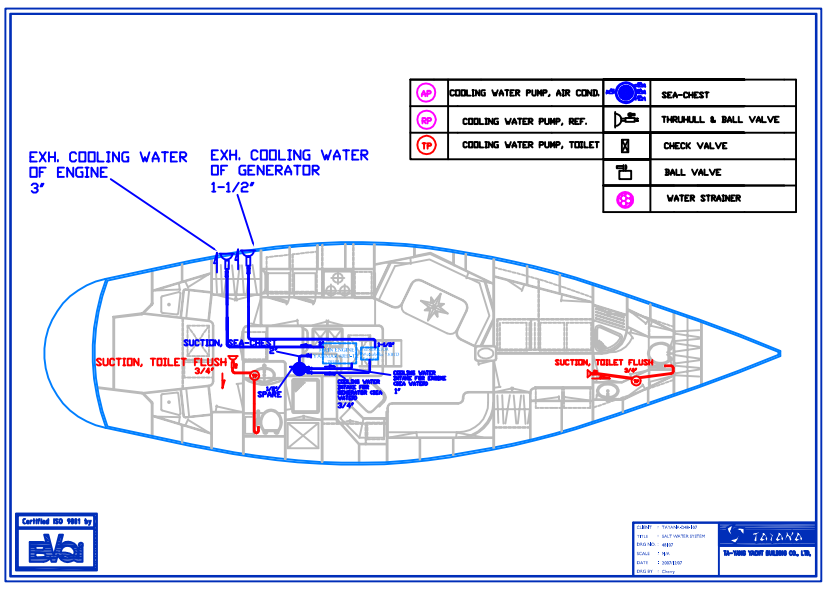
COOLING WATER PUMP, AIR COND.
COOLING WATER PUMP, REF.
COOLING WATER PUMP, TOILET
SEA-CHEST
THRUHULL & BALL VALVE
CHECK VALVE
BALL VALVE
WATER STRAINER
EXH. COOLING WATER OF ENGINE 3"
EXH. COOLING WATER OF GENERATOR 1-1/2"
SUCTION, TOILET FLUSH 3/4"
SUCTION, TOILET FLUSH 3/4"
Certified ISO 9001 by
TATANA

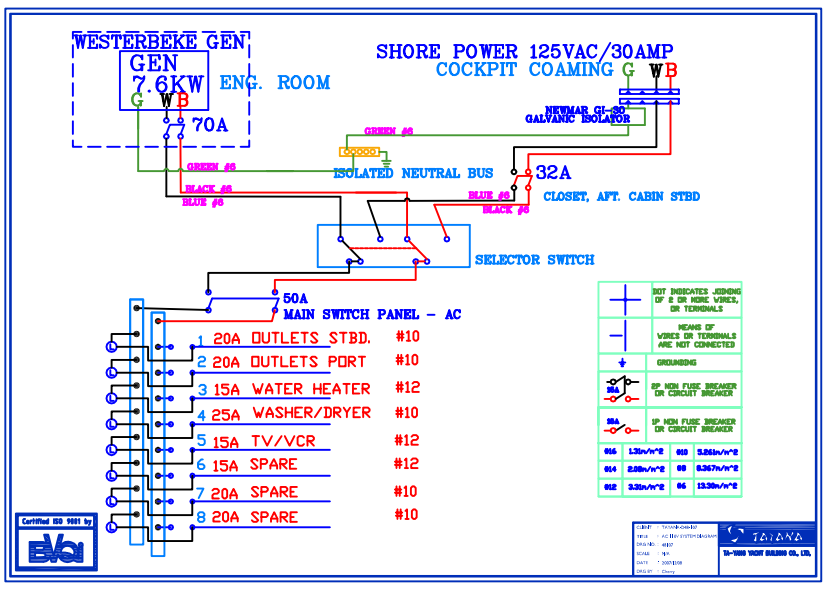
WESTERBEKE GEN
GEN 7.6KW
G W B
70A
ENG. ROOM
SHORE POWER 125VAC/30AMP
COCKPIT COAMING G W B
NEWMAR GI-30 GALVANIC ISOLATOR
ISOLATED NEUTRAL BUS
32A
CLOSET, AFT. CABIN STBD
SELECTOR SWITCH
50A
MAIN SWITCH PANEL - AC
1 20A OUTLETS STBD. #10
2 20A OUTLETS PORT #10
3 15A WATER HEATER #12
4 25A WASHER/DRYER #10
5 15A TV/VCR #12
6 15A SPARE #12
7 20A SPARE #10
8 20A SPARE #10
Certified ISO 9001 by
TATANA

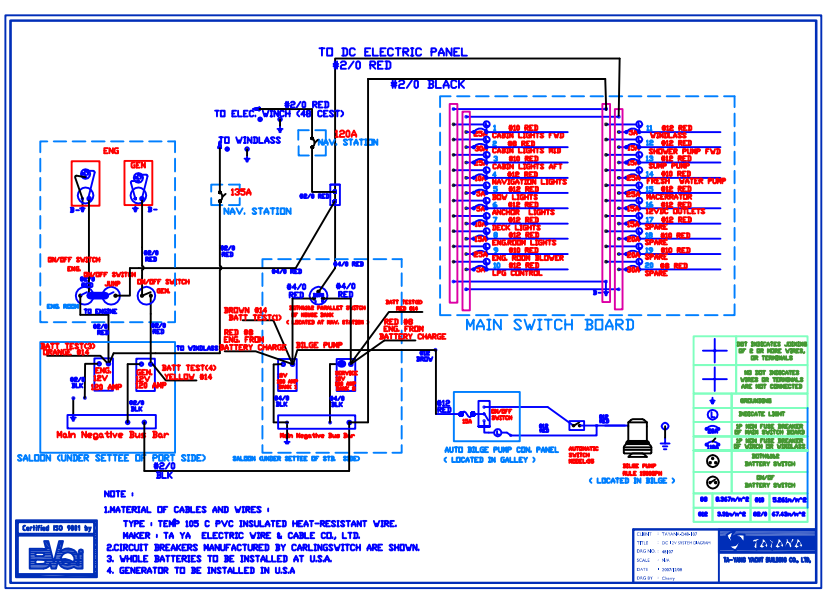
TO DC ELECTRIC PANEL #2/0 RED
#2/0 BLACK
TO ELEC. WINCH (48 CEST)
TO WINDLASS
NAV. STATION
MAIN SWITCH BOARD
BILGE PUMP
AUTO BILGE PUMP CON. PANEL (LOCATED IN GALLEY)
BILGE PUMP (LOCATED IN BILGE)
Main Negative Bus Bar
SALOON (UNDER SETTEE OF PORT SIDE)
NOTE :
1.MATERIAL OF CABLES AND WIRES :
TYPE : TEMP 105 C PVC INSULATED HEAT-RESISTANT WIRE.
MAKER : TA YA ELECTRIC WIRE & CABLE CO., LTD.
2.CIRCUIT BREAKERS MANUFACTURED BY CARLINGSWITCH ARE SHOWN.
3. WHOLE BATTERIES TO BE INSTALLED AT U.S.A.
4. GENERATOR TO BE INSTALLED IN U.S.A
Certified ISO 9001 by
TATANA